INDUSTRIAL ROTATOR **CPR5-01**

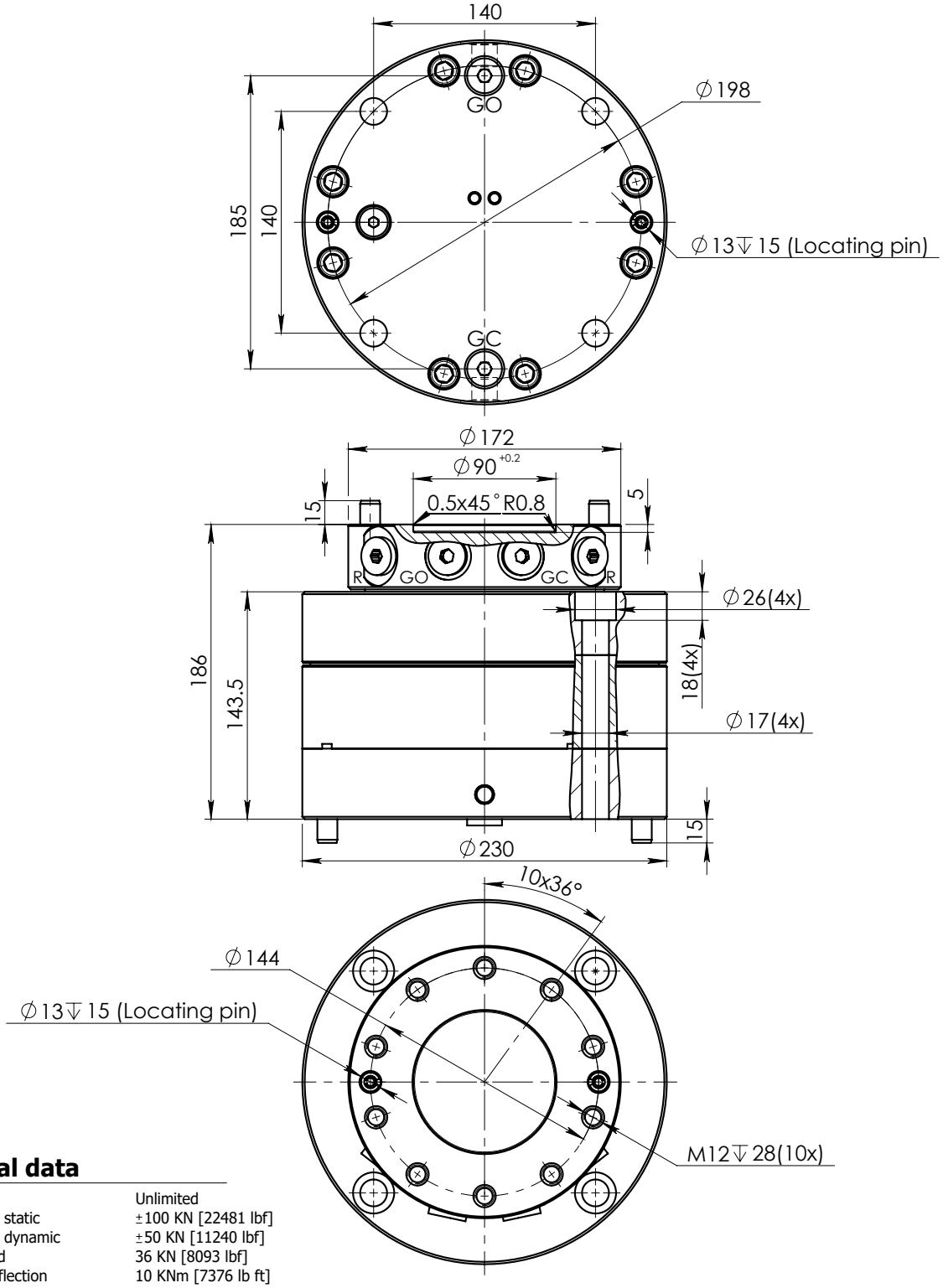

Technical data

Rotation	Unlimited
Max axial load static	±100 KN [22481 lbf]
Max axial load dynamic	±50 KN [11240 lbf]
Max radial load	36 KN [8093 lbf]
Moment of deflection	10 KNm [7376 lb ft]
Torque at 25 Mpa	1350 Nm [996 lb ft]
Rated displacement	354 cm^3/rev. [21.6 in^3/rev.]
Rotation speed	max 30 rpm
Oil duct area for grapple	95 mm^2 [0.147 in^2]
Weight	46 kg [101 lb]

Function	Max working pressure	Rec oilflow	Connection
R - rotation	25 MPa [3625 psi] *	15 l/min [4.0 gal(US)/min]	M 18x1.5
GO - grapple/tool open	35 MPa [5076 psi]		Upper - M 18x1.5; Lower - G 3/8
GC - grapple/tool close	35 MPa [5076 psi]		Upper - M 18x1.5; Lower - G 3/8

* Relief valves fitted
Max axial load static indicate theoretical max load for hanging applications without accelerations.

Sheet 1 of 3

08.12.2017

BALTROTORS®
1 Instituta str., Salaspils, Riga region, LATVIA, LV2169
Phone: +(371) 67 981074, Fax: +(371) 67 981075
E-mail: baltrotors@baltrotors.com